SAVIO EXCELLENCE

F100 F200

Livingponds Filter™

Operating Manual & Installation Guide

Read entire instructions prior to assembly and operation.

Model F200
SAVIO Livingponds
Versatile Filter™

Model F100
SAVIO Livingponds
Waterfall Filter™

17-SV-04

Operating Capacities

SAVIO Livingponds Filters™ are designed for use in water garden applications where low maintenance and healthy pond ecology are desired. Two models of SAVIO Livingponds Filters™ are available. Waterfall model F100 creates an instant waterfall drape or curtain. Versatile model F200 can discharge directly into the top of a waterfall or be placed remotely.

This guide covers the installation of **SAVIO Livingponds Filter™** models **F100 & F200**. These filters are identical in many respects of installation. In steps of assembly where there are differences these differences are highlighted in the text.

Recommended Flow

Savio filters are designed to operate 24 hours a day throughout the season.
Maximum pump flow for Waterfall Filter™ model F100 is 5,000 GPH.
Maximum pump flow for Versatile Filter™ model F200 is 3,000 GPH.

For greater filtration demands, use multiple units (Illustrated on page 12).
Complement your SAVIO Livingponds Filter™ with a **SAVIO Skimmerfilter™** to further reduce maintenance and improve water quality.

Tools needed:

- Phillips Screwdriver
- Utility Knife
- Shovel
- Level
- Measuring Tape
- Large Wrench
- Wet Weld Glue
- Teflon Tape
- Wet Weld Primer

Warranty (Send in the enclosed warranty card)

SAVIO Engineering, Inc. provides a manufacturer's limited warranty of 5 years from original purchase date. Warranty is non-transferable. Within the warranty period SAVIO will repair materials with manufacturing deficiencies at their discretion. This warranty does not cover any faults caused by improper use, installation and handling of the device or as a result of wear and tear. SAVIO Engineering, Inc. does not assume liability for consequential damage caused by the failure of the SAVIO Livingponds Filter.™ Warranty is void if the product is not used in accordance with instructions. For warranty claims, please contact your dealership.

Components: Waterfall Filter (Model F100)

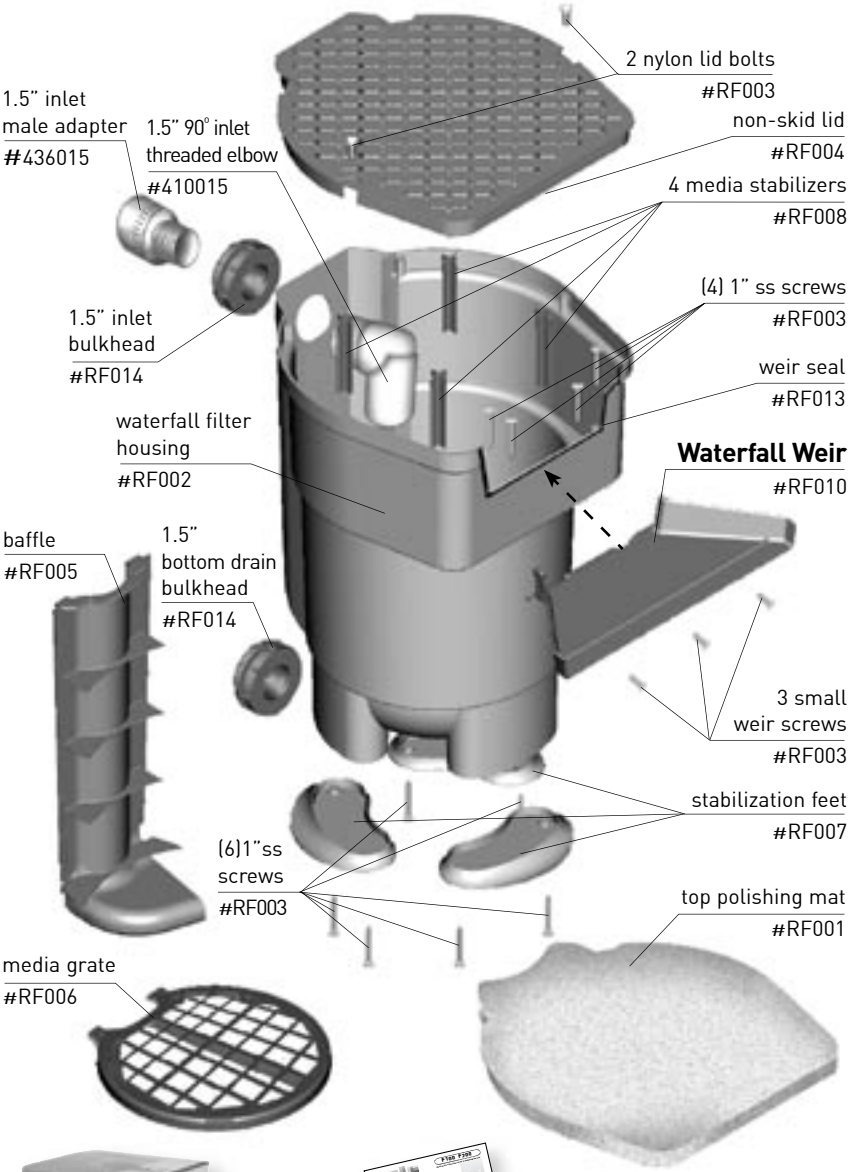

SAVIO Springflo
Bio Filter Media™
#SF01

operating
manual
#LT12

warranty card
#LT10

Components: Versatile Filter (Model F200)

2 nylon lid bolts
#RF003

non-skid lid
#RF004

4 media stabilizers
#RF008

1.5" inlet
male adapter
#436015

1.5" 90° inlet
threaded elbow
#410015

1.5" inlet
bulkhead
#RF014

2" discharge bulkhead
#RF015

waterfall filter
housing
#RF002

2" 90°
discharge elbow
#406020

baffle
#RF005

1.5"
bottom drain
bulkhead
#RF014

2" outlet
male adapter
#433020

stabilization feet
#RF007

(6) 1" ss
screws
#RF003

top polishing mat
#RF001

media grate
#RF006

SAVIO Springflo
Bio Filter Media™
#SF01

operating
manual
#LT12

warranty card
#LT10

Filter Placement

Waterfall Filter Model F100

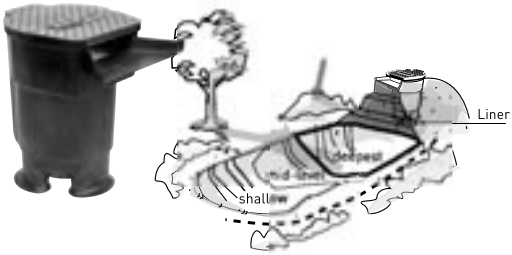

Filter at top of waterfall.

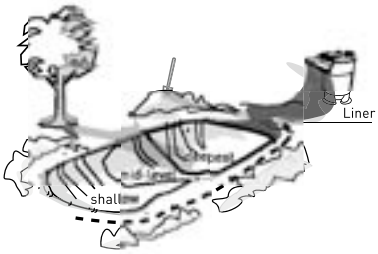

Filter at top of stream.

Choose a location for the SAVIO Waterfall Filter™ at the highest point in the system, at the top of the waterfall or streambed. Place the waterfall opposite the primary viewing area for maximum effect.

Versatile Filter Model F200

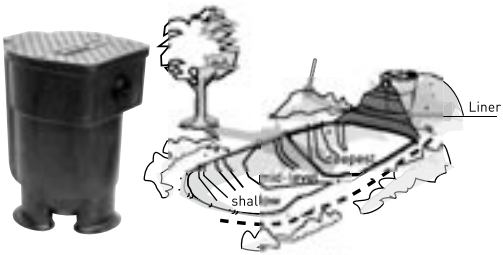

Filter at top of waterfall attached directly to liner.

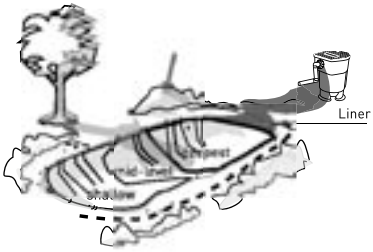

Filter with discharge piping attached.
(See remote installation page 10)

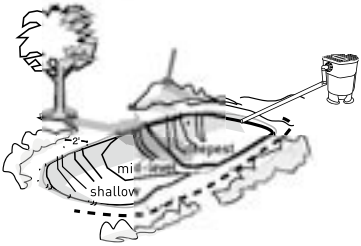

Filter placed remotely within 10' of pond.
(See remote installation page 11)

The Livingponds Versatile Filter™ can be connected directly to the liner or located up to up to 10' away from the pond, behind a wall, fence or other screen.

option

F200 units can be located at a **point lower than the pond**, this configuration has some special plumbing requirements (see appendix, page 15 for more information).

Filter Assembly

Follow the instructions below to pre-assemble filter before installation. Set aside internal components for later installation.

1 Attach Inlet and Drain Bulkheads

To attach inlet and bottom drain bulkheads put the gaskets and large side of the bulkheads on the inside of the filter housing. Install the lock nut on the outside with the smooth surface facing the filter housing. Lock nuts are reverse threaded - tighten using a **counterclockwise** motion.

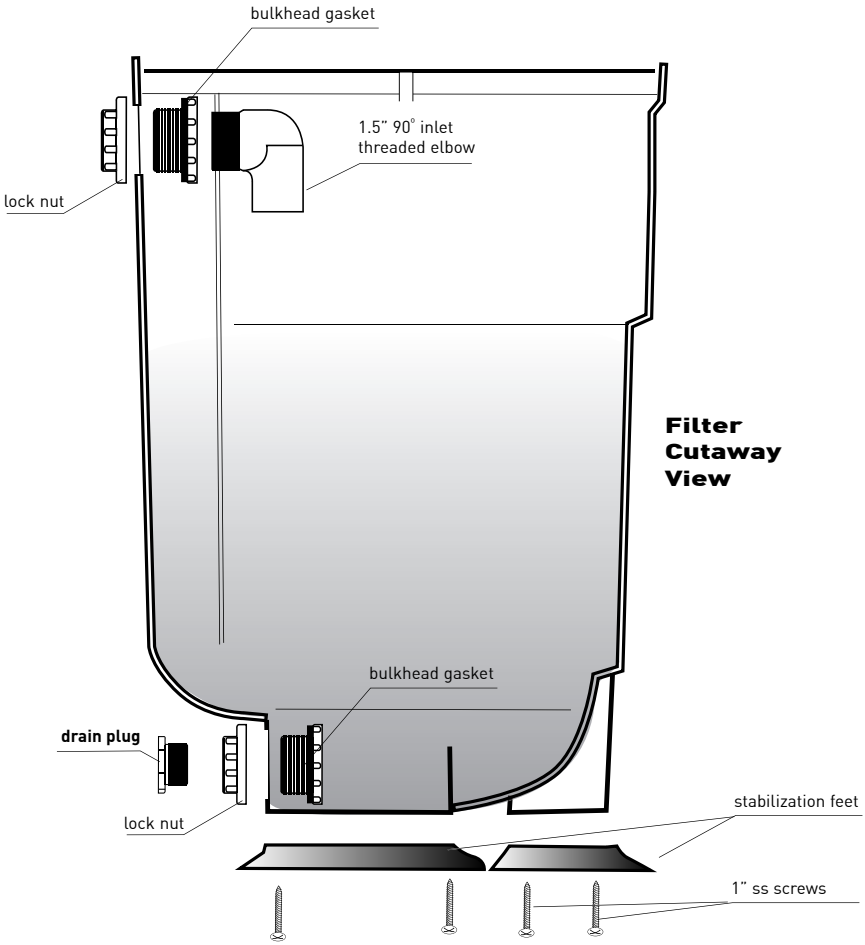

2 Attach Feet

Attach stabilization feet to skimmer using six 1" ss screws provided.

Connect Plumbing

Apply teflon tape to threads on male pipe adapter.

Attach threaded male pipe adapter to the bulkhead at the top of the filter.

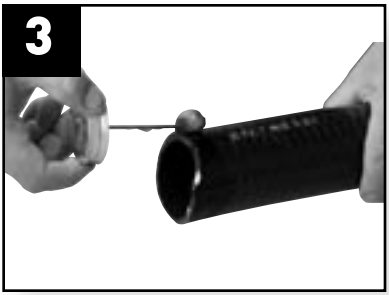

Apply primer and glue to PVC. (Savio Aqua Flex PVC™ shown - not included)

While glue is still wet, attach PVC to the male adapter.

option - Drain Installation

If you purchased a filter bottom drain kit, install it at this time. Follow the instructions provided. To connect, simply remove the drain plug installed during initial assembly.

Livingponds Filter Bottom Drain Kit

The filter bottom drain kit saves time and makes periodic maintenance simpler. This kit is available through your retailer.

Install Waterfall Filter

(Model F100)

Bury the filter for stability. Level the unit so that it is ¼" lower in front than in back (when the filter is placed it should slightly toward the pond).

Excavated soil from the pond can be used to create a runway for a waterfall. Use a retaining wall of blocks to provide shape and underlying structure.

Pull liner over the face of Livingponds Filter.™ Cut liner to shape of opening, as shown.

Slide waterfall weir into place. Ensure that the rubber weir seal is firmly compressed between the weir and filter chamber, with flat side of seal facing toward the filter body.

Install Waterfall Filter

(Model F100)

Insert and gently tighten four 1" ss screws into the holes in the waterfall weir. Do not over tighten (weir mounts will *not* contact filter mounts).

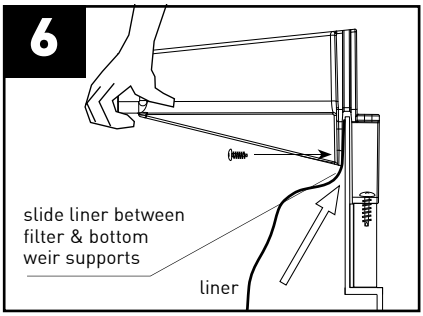

Gently lift weir front. Next slide liner upward between filter and bottom weir supports.

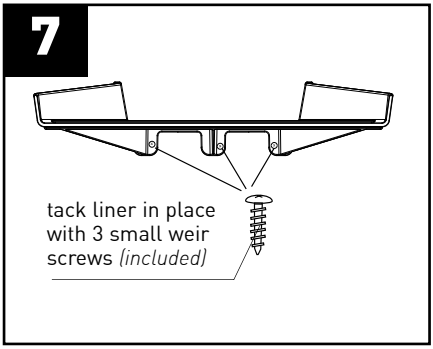

Carefully secure the liner to the Livingponds Filter™ to maintain a watertight transition between the filter and waterfall.

Place underlayment and liner. Position rockwork to create drops and cascades.

Install Versatile Filter

(Model F200)

Instructions for attaching waterfall liner directly to front of the filter.
(For remote installation & pipe discharge options see page 11).

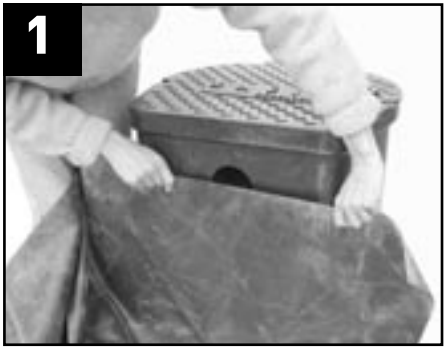

Pull liner up flush against face of filter.

Hold liner flat against filter and find the center of hole.

Carefully cut a hole to the size of outlet with a utility knife.

Attach bulkhead. See diagram below.

Attach the outlet bulkhead with the gasket and large side of the bulkhead on the **outside** of the filter housing. (Note: This is the opposite of the inlet bulkhead installation performed on page 6)

Side View

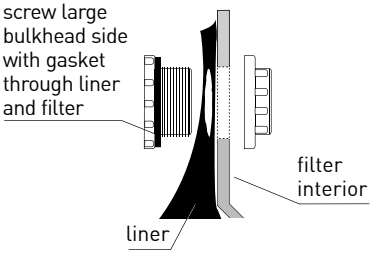

Remote Install/Pipe Discharge

(Model F200)

For remote installations with pipe discharge it is critical to have an 8" minimum vertical drop at the filter outlet (see below). A maximum 10' pipe run can be achieved with this plumbing configuration.

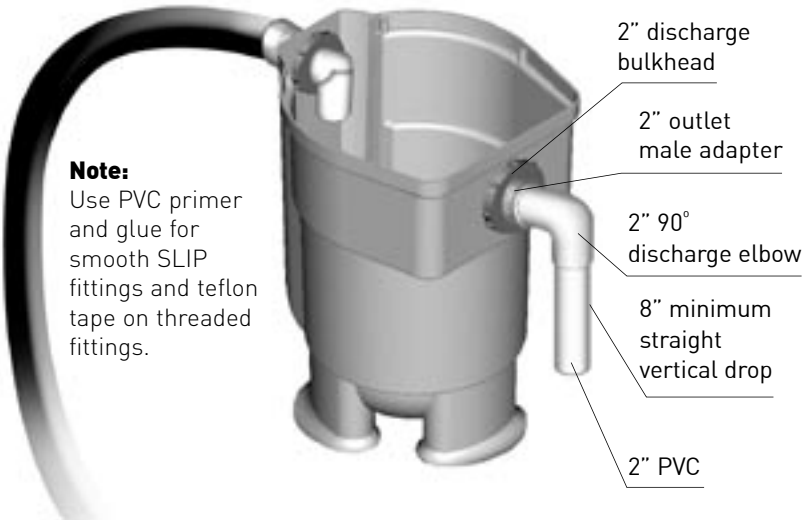

Note:
Use PVC primer and glue for smooth SLIP fittings and teflon tape on threaded fittings.

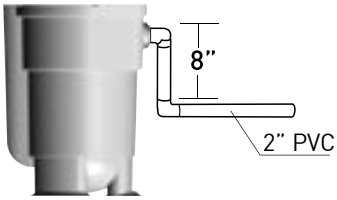

Correct

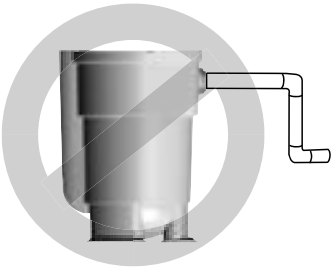

Incorrect

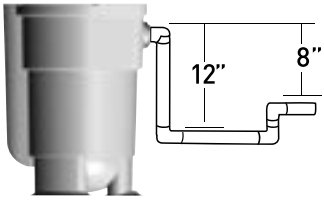

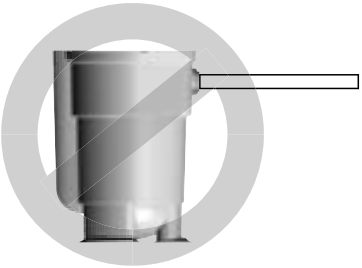

Final Assembly

Slide baffle down grooves inside filter.

Lower media grate into position.

Hold filter media, pull from the bottom center of the roll. Media will self dispense to fill filter chamber.

Place filter mat pad on top of the Savio Springflo Bio Filter Media.™

Insert media stabilizers into underside of lid.

Put lid into place, secure with nylon bolts provided. Start pump and allow filter to fill with water.

Start Ecosystem

Once the filter is installed and the pond is complete add Savio Natural Beneficial Bacteria™ to help establish and maintain the pond (sold separately). The living bacteria develop on filter media, the waterfall bed and pond liner. They help control green water, chemical toxins and pond waste. After four days fish can be added.

It takes approximately four weeks for the bio-filter to establish. During that time feed lightly and do not add more fish to the original starter group until four weeks have passed and the water is tested for nitrite and ammonia.

Add Savio bacteria monthly, when cleaning the filter, after water changes and when handling fish. The unique formulation helps break down waste, remove toxins, reduces maintenance and protects fish.

Equipment Winterization

Prepare for winterization when ice persistently develops on the pond. This generally occurs in mid-to-late November in agricultural zones 4-6. Keep equipment winterized until late February or early March when water temperature consistently rises to 40° Fahrenheit or higher.

Fall Winterization procedure

1) Disconnect, clean and store submersible pump.

2) Completely clean and drain filter and filter media.

3) Drain any plumbing lines not buried below frost level *(18"-24" in agricultural zones 4-6).*

4) Use plumber's heat tape on pipes and shut off valves. Insulate pump house and exterior pumps and valves.

Periodic Maintenance

Filter cleaning is typically required two or three times a year if the filter is properly sized and the pond is not overstocked. Once the pond is established Savio Springflo Bio Filter Media™ (included) is coated with healthy living bacteria. Avoid over cleaning which shocks beneficial bacteria, interferes with filter performance and pond health. Do not use chlorinated water, hot water or chemicals. Do not allow the media to media to dry out during cleanings.

Filter Maintenance

1) Shut off the pump.

2) Remove the Livingponds Filter™ lid.

3) Remove filter mat and gently rinse in a bucket of water taken from the pond.

4) Reach in and vigorously shake the Springflo media to dislodge debris.

5) Drain or empty dirty water from the filter. *(A filter bottom drain is recommended for ease of draining)*

6) Return the filter mat to the filter and put the lid into place.

7) Turn on the pump and re-start system.

Troubleshooting

Faults	Possible Causes	Remedies
Water flows slowly from filter.	a) Pump is turned off or obstructed. b) Feed line is obstructed.	a) I. Check pump operation. II. Remove any obstruction. b) Remove obstruction.
Pond water will not clear.	a) Bacteria have not established. b) Filter is too small for pond. c) Filter media over-cleaned. d) Pond is overstocked.	a) Add beneficial bacteria and wait 3-4 weeks. b) Add a second filter and/or a UV. c) See maintenance section for proper care of media. d) Reduce fish population or increase filtration.
Filter smells.	a) Filter needs cleaning.	a) Clean filter media. Add beneficial bacteria.
Filter overflows.	a) Outlet is obstructed. b) 90º downspout not installed at intake. c) Improper plumbing configuration.	a) Remove obstruction. b) Read instructions for proper assembly of filter and correct problem. c) Read instructions for proper assembly of filter and correct problem.

Replacement parts for livingponds Filters™

Code	Item
RF003	1" ss screws
RF003	small weir screws
RF003	nylon lid bolts
SF01	SAVIO Springflo Bio Filter Media™
RF001	filter mat
RF014	1.5" bulkheads
RF015	2" discharge bulkhead (model F200)
RF013	waterfall weir seal (model F100)
RF010	waterfall weir (model F100)
LT12	instruction manual
RF002	waterfall filter housing (model F100)

Code	Item
RF016	versatile filter housing (model F200)
RF006	media grate
RF004	non-skid lid
RF007	stabilization feet
RF008	media stabilizers
410015	1.5" 90º inlet threaded elbow
RF005	baffle
406020	2" 90º discharge elbow (model F200)
433020	2" outlet male adapter (model F200)
436015	1.5" inlet male adapter

Appendix: Alternate Installations

Multiple Filters

Run one or more units to increase filtration and/or waterfall effects

Two SAVIO Livingponds Waterfall Filters™ operating in tandem.

filtration capacity: 10,000 gallons
max flow rate: 10,000 gph

SAVIO Livingponds Versatile Filter™ operating in series with a Waterfall Filter.™

filtration capacity: 9,000 gallons
max flow rate: 3,000 gph

Two SAVIO Livingponds Versatile Filters™ operating in series.

filtration capacity: 9,000 gallons
max flow rate: 3,000 gph

Remote Location

If necessary the SAVIO Livingponds Versatile Filter™ can be installed at a **point lower than the pond**, separate from the waterfall, using its own pump or using a tee to direct water flow in two directions.

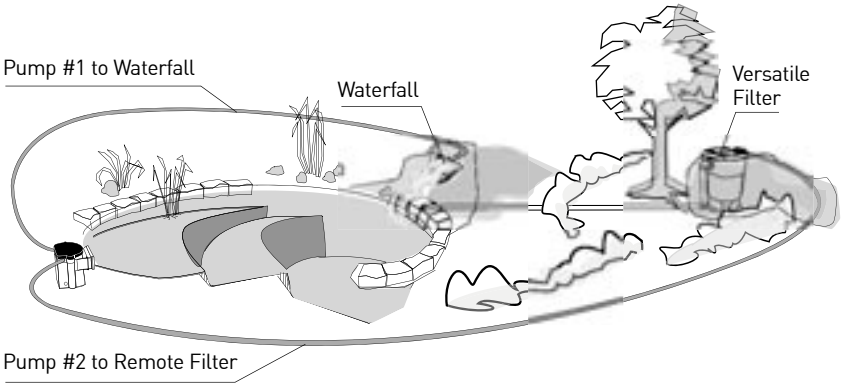

Customer Service Information

SAVIO Engineering, Inc.
8 Water Garden Way
Santa Fe, NM 87508 USA
http://www.savio.cc • email: support@savio.cc

Innovative, precision engineered solutions

Advanced water gardening products for healthy, clean living ponds.

Skimmerfilters™

Livingponds Filters™

Pond Packages

Ultraviolet Clarifiers

Water Master Pumps™

Automated Water Level Sensor™

Springflo Bio Filter Media™

Greenex® Micro Granules

Aqua Flex PVC™

Black Foam

Water Treatments